Work Order ID 140845-1

646.3716
B140845
REV. A

140845

Wednesday, January 20, 2016 1:37:05 PM

Item ID: 646.3716 **Accept** 44pcs. *N900040100* **Setup Start** *NS1*

Revision ID: **Stop** *NS2*

Item Name: Gauge Bracket

Start Date: 1/20/2016 **Start Qty:** 20.00 *20* **Cust Item ID:**

Required Date: 2/5/2016 **Req'd Qty:** 20.00 *20* **Customer:**

Reference:

Approvals: **Process Plan:** MF **Date:** 16-1-20 **Tooling:** _____ **Date:** _____ **Run Start** *NR1*

QC: _____ **Date:** _____ **SPC (Y/N):** _____ **Date:** _____ **Stop** *NR2*

Sequence ID/ Work Center ID	Operation Description	Set Up/ Run Hours	Tool ID	Tool #	Plan Code	Accept Qty	Reject Qty	Reject Number	Insp. Stamp
Draw Nbr / **Revision Nbr**									
646.3700 / A									
110		0.00							
110						(22)		DR 16/01/21	
Waterjet	**Memo**	0.01							
FLOW CNC Waterjet	1-Cut as per Dwg ***GRAIN ALONG 2.41"*** Dwg Rev: A Prog Rev: A 2-Deburr if necessary								
120	QC2- Inspect parts off machine FAI/FAIB	0.00							
120						(22)		DR 16/01/22	
QC	**Memo**	0.00							
Quality Control									

DQA: _____ Date: _____

WORK ORDER NON-CONFORMANCE / UPDATE

QA Closed: Date: Work Order update only ☐

Work Order: _____

Part No. _____

NCR No.

DISPOSITION

Rework	☐
Scrap	☐
Use-as-is	☐
Suspected Unapproved	☐

AGAINST DEPARTMENT/PROCESS

Skid-tube	☐	Cross tube	☐	Water Jet	☐	Engineering	☐
Machining	☐	Small Fab	☐	Prod. Eng. Coor.	☐	Quality	☐
Thermoforming	☐	Finishing	☐	Rec/Store/Packaging	☐	Other	☐
Large Fab	☐	Composite	☐	Supplier	☐		

Date :	Step #:	QTY Effective :	MRB (QSI042) Approval

Description Work Order Deviation	Disposition	Completed By
		Lead hand / Supervisor Approval Verification
		QC / QA Coordinator Approval

Root Cause

Environment	☐	☐	No Re-verfication
Design	☐	☐	Operator
Doc/Data	☐	☐	Offset/Setup
Equip/Tooling	☐	☐	Supplier
Handling/Pre	☐	☐	Training
Material	☐	☐	Use for Testing
Internal Transport	☐	☐	Poor Information
Tribal Knowledge	☐	☐	Rushing
LOA	☐	☐	Product Improvement
Substation	☐	☐	Process Improvement
Past Expiry Date	☐	☐	Manufacturing Process
Misidentified	☐	☐	Past Due

FAULT CATEGORY

☐ Pressure/Forced	☐ Temperature/Cure	☐ Power Loss/Surge	☐ Positioned Wrong
☐ Bending	☐ Set-up	☐ Folio/Program	☐ Outside Dimensions
☐ Centre Not Concentric	☐ BOM/Route	☐ Grain	☐ Over/Under tolerance
☐ Cracks	☐ Broken/Damage/Defect	☐ Weld	☐ Part Incorrect
☐ Crimp/Kink/Ripple/Wave	☐ Inspection Incomplete/Unqualified	☐ Wrong Stock Pulled	☐ Part Lost/Missing
☐ Cuffs	☐ Contamination	☐ Out of Sequence	☐ Part Moved
☐ Crushing	☐ Countersink	☐ Off-set	☐ Drawing
☐ Heat Treat	☐ Cut Too Short	☐ Mislabeled	☐ Finish
☐ Wave/Twist in Tube	☐ Instructions Incomplete/Unclear	☐ Fit/Function	☐ Misread
☐ Marks/Chatter	☐ Drill Holes	☐ Misaligned/off center	☐ Turning Sequence

☐ OTHER :

Item ID: 646.3716 **Accept** *N900040100* **Setup Start** *NS1*

Revision ID: **Stop** *NS2*

Item Name: Gauge Bracket

Start Date: 1/20/2016 **Start Qty:** 20.00 *20*

Required Date: 2/5/2016 **Req'd Qty:** 20.00 *20*

Reference:

Cust Item ID:

Customer:

Run Start *NR1*

Stop *NR2*

Approvals: **Process Plan:** _____ **Date:** _____ **Tooling:** _____ **Date:** _____

QC: _____ **Date:** _____ **SPC (Y/N):** _____ **Date:** _____

Sequence ID/ Work Center ID	Operation Description	Set Up/ Run Hours	Tool ID	Tool #	Plan Code	Accept Qty	Reject Qty	Reject Number	Insp. Stamp
130	QC8- Inspect parts - second check	0.00				22			DAS 38 9-89 JAN 2 1 2016
130									
QC	**Memo**	0.01							
Quality Control									
140	Bend as per dwg	0.00			DAS 30 9-89	22			JAN 2 5 2016
140									
Brake NC	**Memo**	0.01							
Brake NC	USE 5/32" RAD DIE								
150	QC5- Inspect part completeness to step on W/O	0.00				22			DAS 38 9-89 JAN 2 6 2016
150									
QC	**Memo**	0.01							
Quality Control									

DQA: _____ Date: _____

WORK ORDER NON-CONFORMANCE / UPDATE

DART AEROSPACE

QA Closed: Date: Work Order update only ☐

Work Order: _____

Part No. _____

NCR No.

DISPOSITION

Rework ☐
Scrap ☐
Use-as-is ☐
Suspected Unapproved ☐

AGAINST DEPARTMENT/PROCESS

Skid-tube ☐	Cross tube ☐	Water Jet ☐	Engineering ☐
Machining ☐	Small Fab ☐	Prod. Eng. Coor. ☐	Quality ☐
Thermoforming ☐	Finishing ☐	Rec/Store/Packaging ☐	Other ☐
Large Fab ☐	Composite ☐	Supplier ☐	

Date :	Step #:	QTY Effective :	**MRB (QSI042) Approval**
Description Work Order Deviation		**Disposition**	**Completed By**
			Lead hand / Supervisor Approval Verification
			QC / QA Coordinator Approval

Root Cause

Environment ☐	☐	No Re-verfication
Design ☐	☐	Operator
Doc/Data ☐	☐	Offset/Setup
Equip/Tooling ☐	☐	Supplier
Handling/Pre ☐	☐	Training
Material ☐	☐	Use for Testing
Internal Transport ☐	☐	Poor Information
Tribal Knowledge ☐	☐	Rushing
LOA ☐	☐	Product Improvement
Substation ☐	☐	Process Improvement
Past Expiry Date ☐	☐	Manufacturing Process
Misidentified ☐	☐	Past Due

FAULT CATEGORY

☐ Pressure/Forced	☐ Temperature/Cure	☐ Power Loss/Surge	☐ Positioned Wrong
☐ Bending	☐ Set-up	☐ Folio/Program	☐ Outside Dimensions
☐ Centre Not Concentric	☐ BOM/Route	☐ Grain	☐ Over/Under tolerance
☐ Cracks	☐ Broken/Damage/Defect	☐ Weld	☐ Part Incorrect
☐ Crimp/Kink/Ripple/Wave	☐ Inspection Incomplete/Unqualified	☐ Wrong Stock Pulled	☐ Part Lost/Missing
☐ Cuffs	☐ Contamination	☐ Out of Sequence	☐ Part Moved
☐ Crushing	☐ Countersink	☐ Off-set	☐ Drawing
☐ Heat Treat	☐ Cut Too Short	☐ Mislabeled	☐ Finish
☐ Wave/Twist in Tube	☐ Instructions Incomplete/Unclear	☐ Fit/Function	☐ Misread
☐ Marks/Chatter	☐ Drill Holes	☐ Misaligned/off center	☐ Turning Sequence

☐ OTHER :

Item ID: 646.3716 **Accept** *N900040100* **Setup Start** *NS1*
Revision ID: **Stop** *NS2*
Item Name: Gauge Bracket
Start Date: 1/20/2016 **Start Qty:** 20.00 *20* **Cust Item ID:**
Required Date: 2/5/2016 **Req'd Qty:** 20.00 *20* **Customer:**
Reference:

Approvals: **Process Plan:** _____ **Date:** _____ **Tooling:** _____ **Date:** _____ **Run Start** *NR1*
QC: _____ **Date:** _____ **SPC (Y/N):** _____ **Date:** _____ **Stop** *NR2*

Sequence ID/ Work Center ID	Operation Description	Set Up/ Run Hours	Tool ID	Tool #	Plan Code	Accept Qty	Reject Qty	Reject Number	Insp. Stamp
160		0.00				44	JAN 27 2016		DAS 13 9-89
160									
Outsource4	**Memo**	60.00							
Outsource process - Anodize	Issue P/O to ATG : 31078								
	1- Black Anodize as per Dwg 646.3700								
	2- PRIME AS PER DWG, SEE NOTE #2								
	Certification of Comformity is required								
	Received. 44K 8/16-02-03								
170	QC5- Inspect part completeness to step on W/O	0.00				(44)			DAS 38 9-89
170									
QC	**Memo**	0.01							FEB 04 2016
Quality Control									
180	Identify as per dwg & Stock Location: CK108A	0.00				44	FEB 04 2016		
180									
Packaging	**Memo**	0.00							DAS 6 9-89
Packaging	***IDENTIFY AS PER APICAL MPP-120 BY STAMPING THE P# AND REV***								

DQA: _____ Date: _____

WORK ORDER NON-CONFORMANCE / UPDATE

DART AEROSPACE

QA Closed: Date: Work Order update only ☐

Work Order: _____

Part No. _____

NCR No.

DISPOSITION

Rework ☐
Scrap ☐
Use-as-is ☐
Suspected Unapproved ☐

AGAINST DEPARTMENT/PROCESS

Skid-tube	☐	Cross tube	☐	Water Jet	☐	Engineering	☐
Machining	☐	Small Fab	☐	Prod. Eng. Coor.	☐	Quality	☐
Thermoforming	☐	Finishing	☐	Rec/Store/Packaging	☐	Other	☐
Large Fab	☐	Composite	☐	Supplier	☐		

Date :	Step #:	QTY Effective :	MRB (QSI042) Approval

Description Work Order Deviation	Disposition	Completed By
		Lead hand / Supervisor Approval Verification
		QC / QA Coordinator Approval

Root Cause

Environment	☐	☐	No Re-verfication
Design	☐	☐	Operator
Doc/Data	☐	☐	Offset/Setup
Equip/Tooling	☐	☐	Supplier
Handling/Pre	☐	☐	Training
Material	☐	☐	Use for Testing
Internal Transport	☐	☐	Poor Information
Tribal Knowledge	☐	☐	Rushing
LOA	☐	☐	Product Improvement
Substation	☐	☐	Process Improvement
Past Expiry Date	☐	☐	Manufacturing Process
Misidentified	☐	☐	Past Due

FAULT CATEGORY

☐ Pressure/Forced	☐ Temperature/Cure	☐ Power Loss/Surge	☐ Positioned Wrong
☐ Bending	☐ Set-up	☐ Folio/Program	☐ Outside Dimensions
☐ Centre Not Concentric	☐ BOM/Route	☐ Grain	☐ Over/Under tolerance
☐ Cracks	☐ Broken/Damage/Defect	☐ Weld	☐ Part Incorrect
☐ Crimp/Kink/Ripple/Wave	☐ Inspection Incomplete/Unqualified	☐ Wrong Stock Pulled	☐ Part Lost/Missing
☐ Cuffs	☐ Contamination	☐ Out of Sequence	☐ Part Moved
☐ Crushing	☐ Countersink	☐ Off-set	☐ Drawing
☐ Heat Treat	☐ Cut Too Short	☐ Mislabeled	☐ Finish
☐ Wave/Twist in Tube	☐ Instructions Incomplete/Unclear	☐ Fit/Function	☐ Misread
☐ Marks/Chatter	☐ Drill Holes	☐ Misaligned/off center	☐ Turning Sequence

☐ OTHER :

Item ID: 646.3716 **Accept** *N900040100* **Setup Start** *NS1*
Revision ID: **Stop** *NS2*
Item Name: Gauge Bracket
Start Date: 1/20/2016 **Start Qty:** 20.00 *20* **Cust Item ID:**
Required Date: 2/5/2016 **Req'd Qty:** 20.00 *20* **Customer:**
Reference:

Approvals: **Process Plan:** _____ **Date:** _____ **Tooling:** _____ **Date:** _____ **Run Start** *NR1*
QC: _____ **Date:** _____ **SPC (Y/N):** _____ **Date:** _____ **Stop** *NR2*

Sequence ID/ Work Center ID	Operation Description	Set Up/ Run Hours	Tool ID	Tool #	Plan Code	Accept Qty	Reject Qty	Reject Number	Insp. Stamp
190	QC21- Final Inspection - Work Order Release	0.00							
190 QC Quality Control	Memo	0.03				MWJ		FEB 04 2016	

MWJ FEB 04 2016

DQA: _____ Date: _____

WORK ORDER NON-CONFORMANCE / UPDATE

DART AEROSPACE

QA Closed: Date: Work Order update only ☐

Work Order: _____

Part No. _____

NCR No.

DISPOSITION

Rework ☐
Scrap ☐
Use-as-is ☐
Suspected Unapproved ☐

AGAINST DEPARTMENT/PROCESS

Skid-tube ☐	Cross tube ☐	Water Jet ☐	Engineering ☐
Machining ☐	Small Fab ☐	Prod. Eng. Coor. ☐	Quality ☐
Thermoforming ☐	Finishing ☐	Rec/Store/Packaging ☐	Other ☐
Large Fab ☐	Composite ☐	Supplier ☐	

Date :	Step #:	QTY Effective :	**MRB (QSI042) Approval**

Description Work Order Deviation	**Disposition**	**Completed By**
		Lead hand / Supervisor Approval Verification
		QC / QA Coordinator Approval

Root Cause

Environment ☐	☐	No Re-verfication
Design ☐	☐	Operator
Doc/Data ☐	☐	Offset/Setup
Equip/Tooling ☐	☐	Supplier
Handling/Pre ☐	☐	Training
Material ☐	☐	Use for Testing
Internal Transport ☐	☐	Poor Information
Tribal Knowledge ☐	☐	Rushing
LOA ☐	☐	Product Improvement
Substation ☐	☐	Process Improvement
Past Expiry Date ☐	☐	Manufacturing Process
Misidentified ☐	☐	Past Due

FAULT CATEGORY

☐ Pressure/Forced	☐ Temperature/Cure	☐ Power Loss/Surge	☐ Positioned Wrong
☐ Bending	☐ Set-up	☐ Folio/Program	☐ Outside Dimensions
☐ Centre Not Concentric	☐ BOM/Route	☐ Grain	☐ Over/Under tolerance
☐ Cracks	☐ Broken/Damage/Defect	☐ Weld	☐ Part Incorrect
☐ Crimp/Kink/Ripple/Wave	☐ Inspection Incomplete/Unqualified	☐ Wrong Stock Pulled	☐ Part Lost/Missing
☐ Cuffs	☐ Contamination	☐ Out of Sequence	☐ Part Moved
☐ Crushing	☐ Countersink	☐ Off-set	☐ Drawing
☐ Heat Treat	☐ Cut Too Short	☐ Mislabeled	☐ Finish
☐ Wave/Twist in Tube	☐ Instructions Incomplete/Unclear	☐ Fit/Function	☐ Misread
☐ Marks/Chatter	☐ Drill Holes	☐ Misaligned/off center	☐ Turning Sequence

☐ OTHER :

Picklist Print

Wednesday, January 20, 2016 1:37:05 PM

Work Order ID: 140845 *140845*

Parent Item: 646.3716 *646.3716*

Parent Item Name: Gauge Bracket

Start Date: 1/20/2016 **Required Date:** 2/5/2016

Start Qty: 20.00 **Required Qty:** 20.00

Comments: IPP REV:A 12.10.22 NEW ISSUE DD VERF:JLM

Component Item ID/ Item Name	Replacement Item ID	Mfg/ Purch	Bin Item	Primary Location	Last Location	Route Seq ID	Unit of Measure	Qty on Hand	Qty per Kit	Total Qty	Qty Issued	Date Issued	Status
M6061T6S.080		Purchased	No			110	sf	205.4000	0.0306	0.644211			

M6061T6S.080

6061-T6 .080 Sheet

**

02/16/01/21

Location	Loc Qty	Loc Code	
MAT020	205.4		
m132772	45.4		8
m133587	64		
m133828	96		

DQA: _____ Date: _____

WORK ORDER NON-CONFORMANCE / UPDATE

QA Closed: Date: Work Order update only ☐

Work Order: _____

Part No. _____

NCR No.

DISPOSITION

Rework	☐
Scrap	☐
Use-as-is	☐
Suspected Unapproved	☐

AGAINST DEPARTMENT/PROCESS

Skid-tube	☐	Cross tube	☐	Water Jet	☐	Engineering	☐
Machining	☐	Small Fab	☐	Prod. Eng. Coor.	☐	Quality	☐
Thermoforming	☐	Finishing	☐	Rec/Store/Packaging	☐	Other	☐
Large Fab	☐	Composite	☐	Supplier	☐		

Date :	Step #:	QTY Effective :	MRB (QSI042) Approval

Description Work Order Deviation	Disposition	
		Completed By
		Lead hand / Supervisor Approval Verification
		QC / QA Coordinator Approval

Root Cause

Environment	☐	☐	No Re-verfication
Design	☐	☐	Operator
Doc/Data	☐	☐	Offset/Setup
Equip/Tooling	☐	☐	Supplier
Handling/Pre	☐	☐	Training
Material	☐	☐	Use for Testing
Internal Transport	☐	☐	Poor Information
Tribal Knowledge	☐	☐	Rushing
LOA	☐	☐	Product Improvement
Substation	☐	☐	Process Improvement
Past Expiry Date	☐	☐	Manufacturing Process
Misidentified	☐	☐	Past Due

FAULT CATEGORY

☐ Pressure/Forced	☐ Temperature/Cure	☐ Power Loss/Surge	☐ Positioned Wrong
☐ Bending	☐ Set-up	☐ Folio/Program	☐ Outside Dimensions
☐ Centre Not Concentric	☐ BOM/Route	☐ Grain	☐ Over/Under tolerance
☐ Cracks	☐ Broken/Damage/Defect	☐ Weld	☐ Part Incorrect
☐ Crimp/Kink/Ripple/Wave	☐ Inspection Incomplete/Unqualified	☐ Wrong Stock Pulled	☐ Part Lost/Missing
☐ Cuffs	☐ Contamination	☐ Out of Sequence	☐ Part Moved
☐ Crushing	☐ Countersink	☐ Off-set	☐ Drawing
☐ Heat Treat	☐ Cut Too Short	☐ Mislabeled	☐ Finish
☐ Wave/Twist in Tube	☐ Instructions Incomplete/Unclear	☐ Fit/Function	☐ Misread
☐ Marks/Chatter	☐ Drill Holes	☐ Misaligned/off center	☐ Turning Sequence

☐ OTHER :

THE INFORMATION CONTAINED IN THIS DRAWING IS THE SOLE PROPERTY OF APICAL INDUSTRIES. ANY REPRODUCTION IN PART OR WHOLE WITHOUT THE WRITTEN PERMISSION OF APICAL INDUSTRIES IS PROHIBITED

REVISIONS			
REV	DESCRIPTION	DATE	APPROVED

WF
#140845

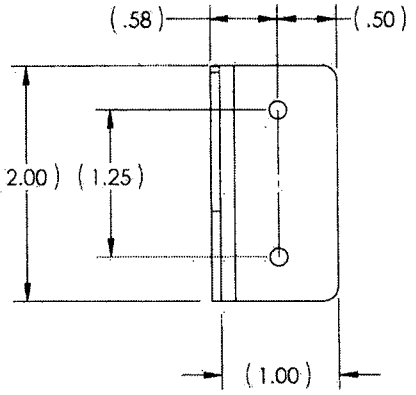

646.3716

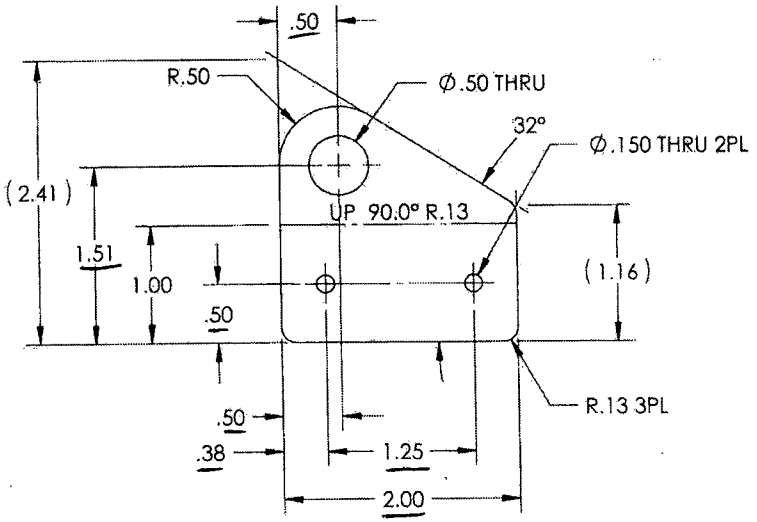

FLAT PATTERN

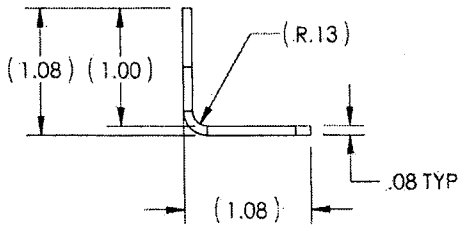

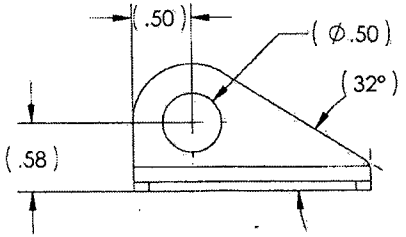

NEXT ASSY [S]	ORIGINAL DATE 08-18-08	APICAL INDUSTRIES	
	DRAWN BY P. BRAVO	CHECKED S. JOSEPH	2608 TEMPLE HEIGHTS DR. OCEANSIDE, CA. 92056-3512 (760)724-5300
	UNLESS OTHERWISE SPECIFIED DIMENSIONS ARE IN INCHES TOLERANCES ARE 2 PLACE DECIMALS ± .01 3 PLACE DECIMALS ± .005 ANGLES ± 5°	DRAWING APPROVAL T. JOSEPH 08-18-08	SHEETMETAL
		COMPANY NO	SIZE B / CAGE CODE 07MZ6 / DWG NO 646.3700 / REV A
			SCALE NONE / SHEET 1 OF 1

DQA: _____ Date: _____

WORK ORDER NON-CONFORMANCE / UPDATE

DART AEROSPACE

QA Closed: Date: Work Order update only ☐

Work Order: _____

Part No. _____

NCR No.

DISPOSITION

Rework ☐
Scrap ☐
Use-as-is ☐
Suspected Unapproved ☐

AGAINST DEPARTMENT/PROCESS

Skid-tube ☐	Cross tube ☐	Water Jet ☐	Engineering ☐
Machining ☐	Small Fab ☐	Prod. Eng. Coor. ☐	Quality ☐
Thermoforming ☐	Finishing ☐	Rec/Store/Packaging ☐	Other ☐
Large Fab ☐	Composite ☐	Supplier ☐	

Date :	Step #:	QTY Effective :	**MRB (QSI042) Approval**
Description Work Order Deviation		**Disposition**	**Completed By**
			Lead hand / Supervisor Approval Verification
			QC / QA Coordinator Approval

Root Cause

Environment ☐	☐	No Re-verfication	
Design ☐	☐	Operator	
Doc/Data ☐	☐	Offset/Setup	
Equip/Tooling ☐	☐	Supplier	
Handling/Pre ☐	☐	Training	
Material ☐	☐	Use for Testing	
Internal Transport ☐	☐	Poor Information	
Tribal Knowledge ☐	☐	Rushing	
LOA ☐	☐	Product Improvement	
Substation ☐	☐	Process Improvement	
Past Expiry Date ☐	☐	Manufacturing Process	
Misidentified ☐	☐	Past Due	

FAULT CATEGORY

☐ Pressure/Forced	☐ Temperature/Cure	☐ Power Loss/Surge	☐ Positioned Wrong
☐ Bending	☐ Set-up	☐ Folio/Program	☐ Outside Dimensions
☐ Centre Not Concentric	☐ BOM/Route	☐ Grain	☐ Over/Under tolerance
☐ Cracks	☐ Broken/Damage/Defect	☐ Weld	☐ Part Incorrect
☐ Crimp/Kink/Ripple/Wave	☐ Inspection Incomplete/Unqualified	☐ Wrong Stock Pulled	☐ Part Lost/Missing
☐ Cuffs	☐ Contamination	☐ Out of Sequence	☐ Part Moved
☐ Crushing	☐ Countersink	☐ Off-set	☐ Drawing
☐ Heat Treat	☐ Cut Too Short	☐ Mislabeled	☐ Finish
☐ Wave/Twist in Tube	☐ Instructions Incomplete/Unclear	☐ Fit/Function	☐ Misread
☐ Marks/Chatter	☐ Drill Holes	☐ Misaligned/off center	☐ Turning Sequence

☐ OTHER :

DART AEROSPACE LTD	Work Order:	140845
Description: Gauge Bracket	Part Number:	646.3716
Inspection Dwg: 646.3700 Rev: A		Page 1 of 1

INSPECTION SHEET

Drawing Dimension	Tolerance	Actual Dimension	Accept	Reject	Method of Inspection	Comments
Ø.150	-.001 +.005	Ø.152	/		V-Dr-02	
Ø.50	-.001 +.006	Ø.501	/			
.50	+/- .010	.499	/			
.50	+/- .010	.501	/			
.38	+/- .010	.375	/			
1.25	+/- .010	1.248	/			
1.51	+/- .010	1.507	/			
2.00	+/- .010	1.999	/			
.080	+/- .010	0.079	/			

Measured by:	Dr	Checked by:	DAS 38 3-89	QC Inspector:	
Date:	16/01/20	Date:	JAN 21 2016	Date:	

Engineering Approval: (If necessary)		Date:	

Rev	Date	Change	Revised by	Approved
B	14.07.31	New Issue	KJ	

Reprint (Possibly) Cut ASAP Jan 22-25

Work Order ID 140845 2

140845

January 22, 2016 11:14:37 AM

Item ID: 646.3716 **Accept** *N900040100* **Setup Start** *NS1*

Revision ID:

Item Name: Gauge Bracket **Stop** *NS2*

Start Date: 1/20/2016 **Start Qty:** 20.00 *20*

Required Date: 2/5/2016 **Req'd Qty:** 20.00 *20*

Reference:

Cust Item ID:

Customer:

Approvals: **Process Plan:** SA **Date:** 20160122 **Tooling:** _____ **Date:** _____ **Run Start** *NR1*

QC: _____ **Date:** _____ **SPC (Y/N):** _____ **Date:** _____ **Stop** *NR2*

Sequence ID/ Work Center ID	Operation Description	Set Up/ Run Hours	Tool ID	Tool #	Plan Code	Accept Qty	Reject Qty	Reject Number	Insp. Stamp

Draw Nbr	Revision Nbr
646.3700	A

110 0.00

110

Waterjet

FLOW CNC Waterjet

Memo 0.01

1-Cut as per Dwg
GRAIN ALONG 2.41"
Dwg Rev: A
Prog Rev: A

2-Deburr if necessary

22 16-1-22

120 QC2- Inspect parts off machine FAI/FAIB 0.00

120

QC

Quality Control

Memo 0.00

22 16-1-22

DQA: _____ Date: _____

WORK ORDER NON-CONFORMANCE / UPDATE

QA Closed: Date: Work Order update only ☐

Work Order: _____

Part No. _____

NCR No.

DISPOSITION

Rework	☐
Scrap	☐
Use-as-is	☐
Suspected Unapproved	☐

AGAINST DEPARTMENT/PROCESS

Skid-tube	☐	Cross tube	☐	Water Jet	☐	Engineering	☐
Machining	☐	Small Fab	☐	Prod. Eng. Coor.	☐	Quality	☐
Thermoforming	☐	Finishing	☐	Rec/Store/Packaging	☐	Other	☐
Large Fab	☐	Composite	☐	Supplier	☐		☐

Date :	Step #:	QTY Effective :	MRB (QSI042) Approval

Description Work Order Deviation	Disposition	Completed By
		Lead hand / Supervisor Approval Verification
		QC / QA Coordinator Approval

Root Cause

Environment	☐	☐	No Re-verfication
Design	☐	☐	Operator
Doc/Data	☐	☐	Offset/Setup
Equip/Tooling	☐	☐	Supplier
Handling/Pre	☐	☐	Training
Material	☐	☐	Use for Testing
Internal Transport	☐	☐	Poor Information
Tribal Knowledge	☐	☐	Rushing
LOA	☐	☐	Product Improvement
Substation	☐	☐	Process Improvement
Past Expiry Date	☐	☐	Manufacturing Process
Misidentified	☐	☐	Past Due

FAULT CATEGORY

☐	Pressure/Forced	☐	Temperature/Cure	☐	Power Loss/Surge	☐	Positioned Wrong
☐	Bending	☐	Set-up	☐	Folio/Program	☐	Outside Dimensions
☐	Centre Not Concentric	☐	BOM/Route	☐	Grain	☐	Over/Under tolerance
☐	Cracks	☐	Broken/Damage/Defect	☐	Weld	☐	Part Incorrect
☐	Crimp/Kink/Ripple/Wave	☐	Inspection Incomplete/Unqualified	☐	Wrong Stock Pulled	☐	Part Lost/Missing
☐	Cuffs	☐	Contamination	☐	Out of Sequence	☐	Part Moved
☐	Crushing	☐	Countersink	☐	Off-set	☐	Drawing
☐	Heat Treat	☐	Cut Too Short	☐	Mislabeled	☐	Finish
☐	Wave/Twist in Tube	☐	Instructions Incomplete/Unclear	☐	Fit/Function	☐	Misread
☐	Marks/Chatter	☐	Drill Holes	☐	Misaligned/off center	☐	Turning Sequence

☐ OTHER :

Item ID: 646.3716
Revision ID:
Item Name: Gauge Bracket
Start Date: 1/20/2016 **Start Qty:** 20.00 *20*
Required Date: 2/5/2016 **Req'd Qty:** 20.00 *20*
Reference:

Accept *N900040100* **Setup Start** *NS1* **Stop** *NS2*

Cust Item ID:
Customer:

Approvals: **Process Plan:** _____ **Date:** _____ **Tooling:** _____ **Date:** _____
QC: _____ **Date:** _____ **SPC (Y/N):** _____ **Date:** _____

Run Start *NR1* **Stop** *NR2*

Sequence ID/ Work Center ID	Operation Description	Set Up/ Run Hours	Tool ID	Tool #	Plan Code	Accept Qty	Reject Qty	Reject Number	Insp. Stamp
130	QC8- Inspect parts - second check	0.00				22			DAS 38 9-89
130									
QC	**Memo**	0.01							
Quality Control									JAN 22 2016
140	Bend as per dwg	0.00			DAS 30 9-89	22			JAN 25 2016
140									
Brake NC	**Memo**	0.01							
Brake NC	USE 5/32" RAD DIE								
150	QC5- Inspect part completeness to step on W/O	0.00				22			DAS 38 9-89
150									
QC	**Memo**	0.01							
Quality Control									JAN 26 2016

DQA: _____ Date: _____

WORK ORDER NON-CONFORMANCE / UPDATE

DART AEROSPACE

QA Closed: Date: Work Order update only ☐

Work Order: _____

Part No. _____

NCR No.

DISPOSITION

Rework ☐
Scrap ☐
Use-as-is ☐
Suspected Unapproved ☐

AGAINST DEPARTMENT/PROCESS

Skid-tube ☐	Cross tube ☐	Water Jet ☐	Engineering ☐
Machining ☐	Small Fab ☐	Prod. Eng. Coor. ☐	Quality ☐
Thermoforming ☐	Finishing ☐	Rec/Store/Packaging ☐	Other ☐
Large Fab ☐	Composite ☐	Supplier ☐	

Date :	Step #:	QTY Effective :	MRB (QSI042) Approval

Description Work Order Deviation	Disposition	Completed By
		Lead hand / Supervisor Approval Verification
		QC / QA Coordinator Approval

Root Cause

Environment ☐	☐ No Re-verification	Design ☐	☐ Operator
Doc/Data ☐	☐ Offset/Setup	Equip/Tooling ☐	☐ Supplier
Handling/Pre ☐	☐ Training	Material ☐	☐ Use for Testing
Internal Transport ☐	☐ Poor Information	Tribal Knowledge ☐	☐ Rushing
LOA ☐	☐ Product Improvement	Substation ☐	☐ Process Improvement
Past Expiry Date ☐	☐ Manufacturing Process	Misidentified ☐	☐ Past Due

FAULT CATEGORY

☐ Pressure/Forced	☐ Temperature/Cure	☐ Power Loss/Surge	☐ Positioned Wrong
☐ Bending	☐ Set-up	☐ Folio/Program	☐ Outside Dimensions
☐ Centre Not Concentric	☐ BOM/Route	☐ Grain	☐ Over/Under tolerance
☐ Cracks	☐ Broken/Damage/Defect	☐ Weld	☐ Part Incorrect
☐ Crimp/Kink/Ripple/Wave	☐ Inspection Incomplete/Unqualified	☐ Wrong Stock Pulled	☐ Part Lost/Missing
☐ Cuffs	☐ Contamination	☐ Out of Sequence	☐ Part Moved
☐ Crushing	☐ Countersink	☐ Off-set	☐ Drawing
☐ Heat Treat	☐ Cut Too Short	☐ Mislabeled	☐ Finish
☐ Wave/Twist in Tube	☐ Instructions Incomplete/Unclear	☐ Fit/Function	☐ Misread
☐ Marks/Chatter	☐ Drill Holes	☐ Misaligned/off center	☐ Turning Sequence

☐ OTHER :

Item ID: 646.3716
Revision ID:
Item Name: Gauge Bracket
Start Date: 1/20/2016 **Start Qty:** 20.00 *20*
Required Date: 2/5/2016 **Req'd Qty:** 20.00 *20*
Reference:

Accept *N900040100*
Setup Start *NS1*
Stop *NS2*
Cust Item ID:
Customer:

Approvals: **Process Plan:** _____ **Date:** _____ **Tooling:** _____ **Date:** _____
QC: _____ **Date:** _____ **SPC (Y/N):** _____ **Date:** _____

Run Start *NR1*
Stop *NR2*

Sequence ID/ Work Center ID	Operation Description	Set Up/ Run Hours	Tool ID	Tool #	Plan Code	Accept Qty	Reject Qty	Reject Number	Insp. Stamp
160		0.00							
160									
Outsource4	**Memo**	60.00				_____	_____	_____	_____
Outsource process - Anodize	Issue P/O to ATG : _____ 1- Black Anodize as per Dwg 646.3700 2- PRIME AS PER DWG, SEE NOTE #2 Certification of Comformity is required								
170	QC5- Inspect part completeness to step on W/O	0.00							
170									
QC	**Memo**	0.01				_____	_____	_____	_____
Quality Control									
180	Identify as per dwg & Stock Location:_____	0.00							
180									
Packaging	**Memo**	0.00				_____	_____	_____	_____
Packaging	***IDENTIFY AS PER APICAL MPP-120 BY STAMPING THE P# AND REV***								

DQA: _____ Date: _____

WORK ORDER NON-CONFORMANCE / UPDATE

QA Closed: Date: Work Order update only ☐

Work Order: _____

Part No. _____

NCR No.

DISPOSITION

Rework	☐
Scrap	☐
Use-as-is	☐
Suspected Unapproved	☐

AGAINST DEPARTMENT/PROCESS

Skid-tube	☐	Cross tube	☐	Water Jet	☐	Engineering	☐
Machining	☐	Small Fab	☐	Prod. Eng. Coor.	☐	Quality	☐
Thermoforming	☐	Finishing	☐	Rec/Store/Packaging	☐	Other	☐
Large Fab	☐	Composite	☐	Supplier	☐		☐

Date :	Step #:	QTY Effective :	MRB (QSI042) Approval

Description Work Order Deviation	Disposition	Completed By
		Lead hand / Supervisor Approval Verification
		QC / QA Coordinator Approval

Root Cause

Environment	☐	☐	No Re-verification
Design	☐	☐	Operator
Doc/Data	☐	☐	Offset/Setup
Equip/Tooling	☐	☐	Supplier
Handling/Pre	☐	☐	Training
Material	☐	☐	Use for Testing
Internal Transport	☐	☐	Poor Information
Tribal Knowledge	☐	☐	Rushing
LOA	☐	☐	Product Improvement
Substation	☐	☐	Process Improvement
Past Expiry Date	☐	☐	Manufacturing Process
Misidentified	☐	☐	Past Due

FAULT CATEGORY

☐ Pressure/Forced	☐ Temperature/Cure	☐ Power Loss/Surge	☐ Positioned Wrong
☐ Bending	☐ Set-up	☐ Folio/Program	☐ Outside Dimensions
☐ Centre Not Concentric	☐ BOM/Route	☐ Grain	☐ Over/Under tolerance
☐ Cracks	☐ Broken/Damage/Defect	☐ Weld	☐ Part Incorrect
☐ Crimp/Kink/Ripple/Wave	☐ Inspection Incomplete/Unqualified	☐ Wrong Stock Pulled	☐ Part Lost/Missing
☐ Cuffs	☐ Contamination	☐ Out of Sequence	☐ Part Moved
☐ Crushing	☐ Countersink	☐ Off-set	☐ Drawing
☐ Heat Treat	☐ Cut Too Short	☐ Mislabeled	☐ Finish
☐ Wave/Twist in Tube	☐ Instructions Incomplete/Unclear	☐ Fit/Function	☐ Misread
☐ Marks/Chatter	☐ Drill Holes	☐ Misaligned/off center	☐ Turning Sequence

☐ OTHER :

Item ID: 646.3716
Revision ID:
Item Name: Gauge Bracket
Start Date: 1/20/2016 **Start Qty:** 20.00 *20*
Required Date: 2/5/2016 **Req'd Qty:** 20.00 *20*
Reference:

Accept *N900040100*

Setup Start *NS1*
Stop *NS2*

Cust Item ID:
Customer:

Approvals: **Process Plan:** _____ **Date:** _____ **Tooling:** _____ **Date:** _____
QC: _____ **Date:** _____ **SPC (Y/N):** _____ **Date:** _____

Run Start *NR1*
Stop *NR2*

Sequence ID/ Work Center ID	Operation Description	Set Up/ Run Hours	Tool ID	Tool #	Plan Code	Accept Qty	Reject Qty	Reject Number	Insp. Stamp
190	QC21- Final Inspection - Work Order Release	0.00							
190									
QC	**Memo**	0.03				_____	_____	_____	_____
Quality Control									

DQA: _____ Date: _____

WORK ORDER NON-CONFORMANCE / UPDATE

QA Closed: Date: Work Order update only ☐

Work Order: _____

Part No. _____

NCR No.

DISPOSITION

Rework	☐
Scrap	☐
Use-as-is	☐
Suspected Unapproved	☐

AGAINST DEPARTMENT/PROCESS

Skid-tube	☐	Cross tube	☐	Water Jet	☐	Engineering	☐
Machining	☐	Small Fab	☐	Prod. Eng. Coor.	☐	Quality	☐
Thermoforming	☐	Finishing	☐	Rec/Store/Packaging	☐	Other	☐
Large Fab	☐	Composite	☐	Supplier	☐		☐

Date :	Step #:	QTY Effective :	MRB (QSI042) Approval

Description Work Order Deviation	Disposition	Completed By
		Lead hand / Supervisor Approval Verification
		QC / QA Coordinator Approval

Root Cause

Environment	☐	☐	No Re-verfication
Design	☐	☐	Operator
Doc/Data	☐	☐	Offset/Setup
Equip/Tooling	☐	☐	Supplier
Handling/Pre	☐	☐	Training
Material	☐	☐	Use for Testing
Internal Transport	☐	☐	Poor Information
Tribal Knowledge	☐	☐	Rushing
LOA	☐	☐	Product Improvement
Substation	☐	☐	Process Improvement
Past Expiry Date	☐	☐	Manufacturing Process
Misidentified	☐	☐	Past Due

FAULT CATEGORY

☐ Pressure/Forced	☐ Temperature/Cure	☐ Power Loss/Surge	☐ Positioned Wrong
☐ Bending	☐ Set-up	☐ Folio/Program	☐ Outside Dimensions
☐ Centre Not Concentric	☐ BOM/Route	☐ Grain	☐ Over/Under tolerance
☐ Cracks	☐ Broken/Damage/Defect	☐ Weld	☐ Part Incorrect
☐ Crimp/Kink/Ripple/Wave	☐ Inspection Incomplete/Unqualified	☐ Wrong Stock Pulled	☐ Part Lost/Missing
☐ Cuffs	☐ Contamination	☐ Out of Sequence	☐ Part Moved
☐ Crushing	☐ Countersink	☐ Off-set	☐ Drawing
☐ Heat Treat	☐ Cut Too Short	☐ Mislabeled	☐ Finish
☐ Wave/Twist in Tube	☐ Instructions Incomplete/Unclear	☐ Fit/Function	☐ Misread
☐ Marks/Chatter	☐ Drill Holes	☐ Misaligned/off center	☐ Turning Sequence

☐ OTHER :

Picklist Print

January 22, 2016 11:14:41 AM

Work Order ID: 140845

140845

Parent Item: 646.3716

646.3716

Parent Item Name: Gauge Bracket

Start Date: 1/20/2016 **Required Date:** 2/5/2016

Start Qty: 20.00 **Required Qty:** 20.00

Comments: IPP REV:A 12.10.22 NEW ISSUE DD VERF:JLM

Component Item ID/ Item Name	Replacement Item ID	Mfg/ Purch	Bin Item	Primary Location	Last Location	Route Seq ID	Unit of Measure	Qty on Hand	Qty per Kit	Total Qty	Qty Issued	Date Issued	Status
M6061T6S.080		Purchased	No			110	sf	205.4000	0.0306	0.644211			
M6061T6S.080									**				
6061-T6 .080 Sheet													

Location	Loc Qty	Loc Code	
MAT020	205.4		
m132772	45.4		
m133587	64		
m133828	96		/

DQA: _____ Date: _____

WORK ORDER NON-CONFORMANCE / UPDATE

QA Closed: Date: Work Order update only ☐

Work Order: _____

Part No. _____

NCR No.

DISPOSITION

Rework	☐
Scrap	☐
Use-as-is	☐
Suspected Unapproved	☐

AGAINST DEPARTMENT/PROCESS

Skid-tube	☐	Cross tube	☐	Water Jet	☐
Machining	☐	Small Fab	☐	Prod. Eng. Coor.	☐
Thermoforming	☐	Finishing	☐	Rec/Store/Packaging	☐
Large Fab	☐	Composite	☐	Supplier	☐

Engineering	☐		
Quality	☐		
Other	☐		
	☐		

Date :	Step #:	QTY Effective :	MRB (QSI042) Approval

Description Work Order Deviation	Disposition	Completed By
		Lead hand / Supervisor Approval Verification
		QC / QA Coordinator Approval

Root Cause

Environment	☐	☐	No Re-verification
Design	☐	☐	Operator
Doc/Data	☐	☐	Offset/Setup
Equip/Tooling	☐	☐	Supplier
Handling/Pre	☐	☐	Training
Material	☐	☐	Use for Testing
Internal Transport	☐	☐	Poor Information
Tribal Knowledge	☐	☐	Rushing
LOA	☐	☐	Product Improvement
Substation	☐	☐	Process Improvement
Past Expiry Date	☐	☐	Manufacturing Process
Misidentified	☐	☐	Past Due

FAULT CATEGORY

☐ Pressure/Forced	☐ Temperature/Cure	☐ Power Loss/Surge	☐ Positioned Wrong
☐ Bending	☐ Set-up	☐ Folio/Program	☐ Outside Dimensions
☐ Centre Not Concentric	☐ BOM/Route	☐ Grain	☐ Over/Under tolerance
☐ Cracks	☐ Broken/Damage/Defect	☐ Weld	☐ Part Incorrect
☐ Crimp/Kink/Ripple/Wave	☐ Inspection Incomplete/Unqualified	☐ Wrong Stock Pulled	☐ Part Lost/Missing
☐ Cuffs	☐ Contamination	☐ Out of Sequence	☐ Part Moved
☐ Crushing	☐ Countersink	☐ Off-set	☐ Drawing
☐ Heat Treat	☐ Cut Too Short	☐ Mislabeled	☐ Finish
☐ Wave/Twist in Tube	☐ Instructions Incomplete/Unclear	☐ Fit/Function	☐ Misread
☐ Marks/Chatter	☐ Drill Holes	☐ Misaligned/off center	☐ Turning Sequence

☐ OTHER :

APICAL INDUSTRIES, INC.

ENGINEERING CHANGE NOTICE NO. 03702 | SHEET 1 OF 2

DWG NO. 646.3700 | REV: A | PREPARED BY B. PETERS | DATE: 11/15/12 | EFFECT ON DWG ☐ INC. ☒ UNINC.

DWG TITLE: SHEETMETAL

APPROVED BY: ENGR | MFG | QC | EFF: NEXT ORDER

TRANSACTION CODES (TC): A-ADD C-CREATE R-REVISE D-DELETE

REASON: ADDED ALTERNATE MATERIAL AND REVISED REFERENCE DIMENSIONS

ECR: D-12-010

SHEET 1, ZONE A2 IS:

IS

⚠ PRIMARY MATERIAL: ALUMINUM 6061-T6 PER AMS-QQ-A-250/11
ALTERNATE MATERIAL: SS 17-4 PH PER AMS 5604

SHEET 7, ZONE B1 IS:

IS

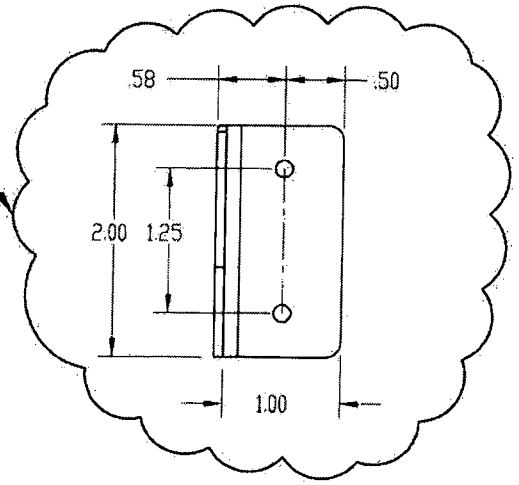

20160122

SA 140845

F/N	TC	PART NUMBER	QTY	DESCRIPTION	MATERIAL	SPECIFICATION

DOCUMENTS EFFECTED: ☐ RFMS ☐ MDL ☐ INSTALL INSTRUC ☐ ICA ☐ BOM

CHANGE CATEGORY ☐ MAJOR ☒ MINOR

DER REVIEW REQUIRED ☐ YES ☒ NO

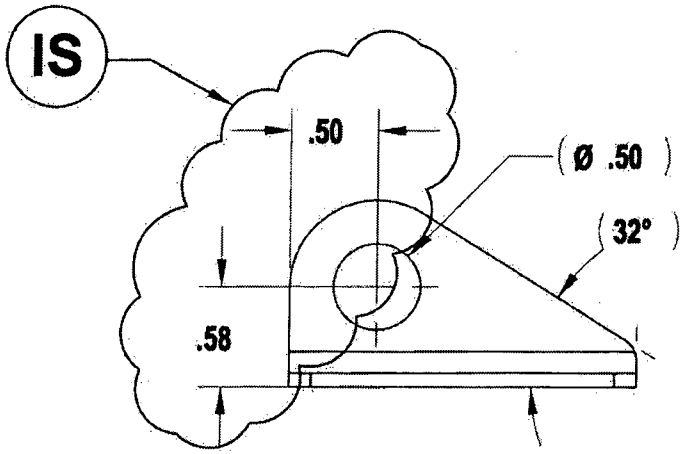

SHEET 7, ZONE C4 IS:

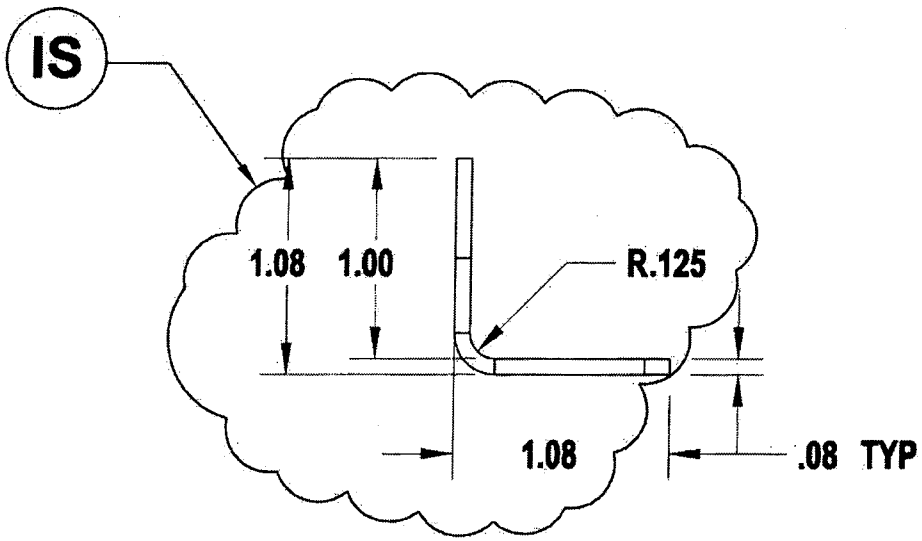

SHEET 7, ZONE D1 IS:

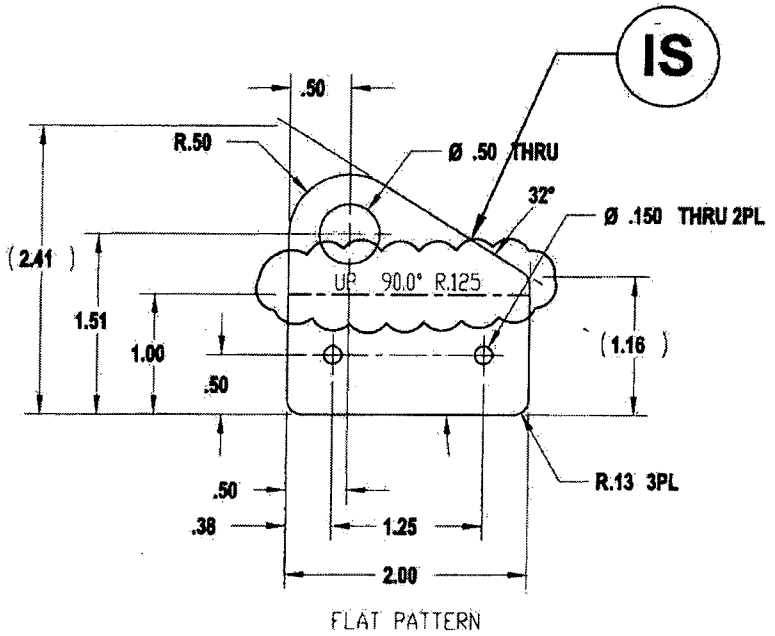

SHEET 7, ZONE B7 IS:

F/N	TC	PART NUMBER	QTY	DESCRIPTION	MATERIAL/SPECIFICATION

THE INFORMATION CONTAINED IN THIS DRAWING IS THE SOLE PROPERTY OF APICAL INDUSTRIES. ANY REPRODUCTION IN PART OR WHOLE WITHOUT THE WRITTEN PERMISSION OF APICAL INDUSTRIES IS PROHIBITED.

REVISIONS			
REV	DESCRIPTION	DATE	APPROVED
A	INCORPORATED ECN 03702	01/03/09	

NOTES:

1. MATERIAL: ALUMINUM 6061-T6 PER AMS-QQ-A-250/11
2. FINISH: HARD ANODIZE IAW MIL-A-8625 TYPE III, CLASS 2, COLOR BLACK; CARDINAL 4860-50 PRETREATMENT PRIMER PRIME IAW MIL-P-23377J TYPE I CLASS N
3. MATERIAL: 17-4 PH AMS 5604, CONDITION H900
4. FINISH: PRIME IAW MIL-P-23377J TYPE I CLASS N
5. DEBURR AND BREAK ALL SHARP EDGES
6. IDENTIFY IAW MPP-120

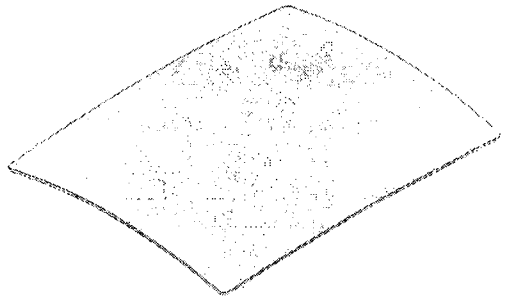

646.3710

UNINCORPORATED ECN(s)

03702

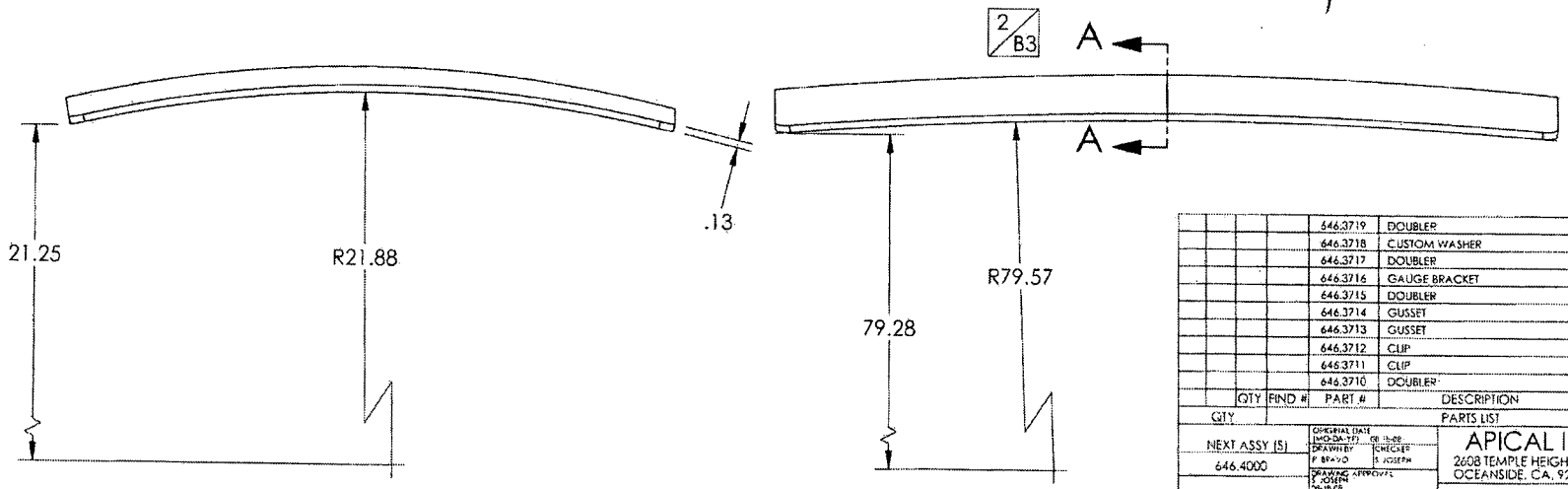

QTY	FIND #	PART #	DESCRIPTION	MAT'L	SPEC.
		646.3719	DOUBLER	1	2
		646.3718	CUSTOM WASHER	1	2
		646.3717	DOUBLER	1	2
		646.3716	GAUGE BRACKET	3	4
		646.3715	DOUBLER	1	2
		646.3714	GUSSET	1	2
		646.3713	GUSSET	1	2
		646.3712	CLIP	1	2
		646.3711	CLIP	1	2
		646.3710	DOUBLER	1	2

PARTS LIST

NEXT ASSY (S): 646.4000

ORIGINAL DATE (MO-DA-YY): 08-18-08
DRAWN BY: P BRAVO
CHECKED: S JOSEPH
DRAWING APPROVED: S JOSEPH 08-18-08
CONTRACT NO.

UNLESS OTHERWISE SPECIFIED DIMENSIONS ARE IN INCHES TOLERANCES ARE 2 PLACE DECIMALS ±.01 3 PLACE DECIMALS ±.005 ANGLES ± .5°

APICAL INDUSTRIES
2608 TEMPLE HEIGHTS DR.
OCEANSIDE, CA. 92056-3512 (760)724-5300

SHEETMETAL

SIZE	CAGE CODE	DWG NO	REV
B	07M26	646.3700	A

SCALE NONE | SHEET 1 OF 9

THE INFORMATION CONTAINED IN THIS DRAWING IS THE SOLE PROPERTY OF APICAL INDUSTRIES ANY REPRODUCTION IN PART OR WHOLE WITHOUT THE WRITTEN PERMISSION OF APICAL INDUSTRIES IS PROHIBITED.

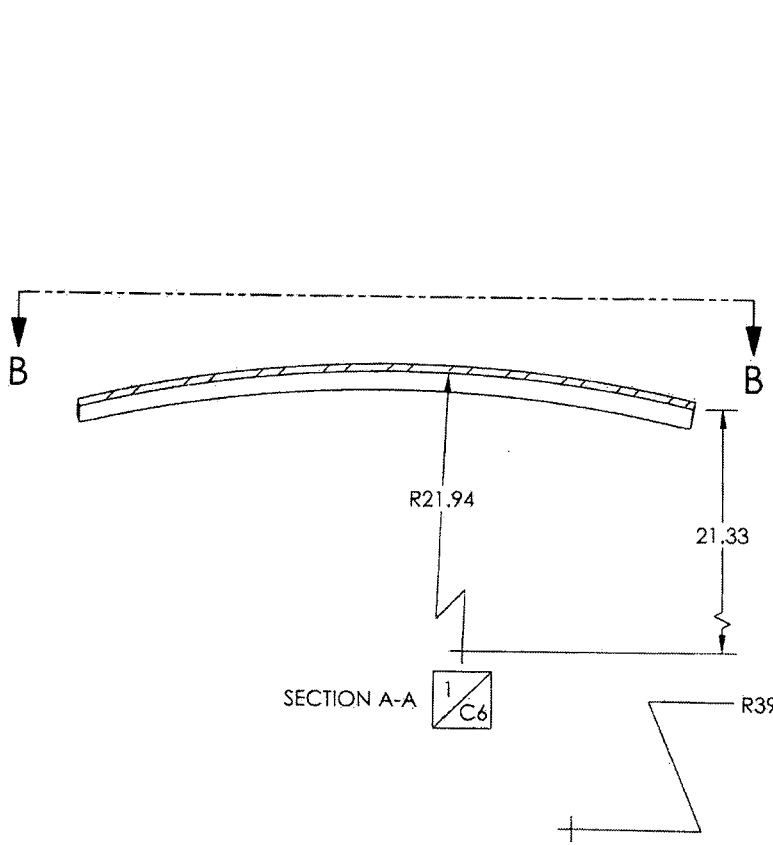

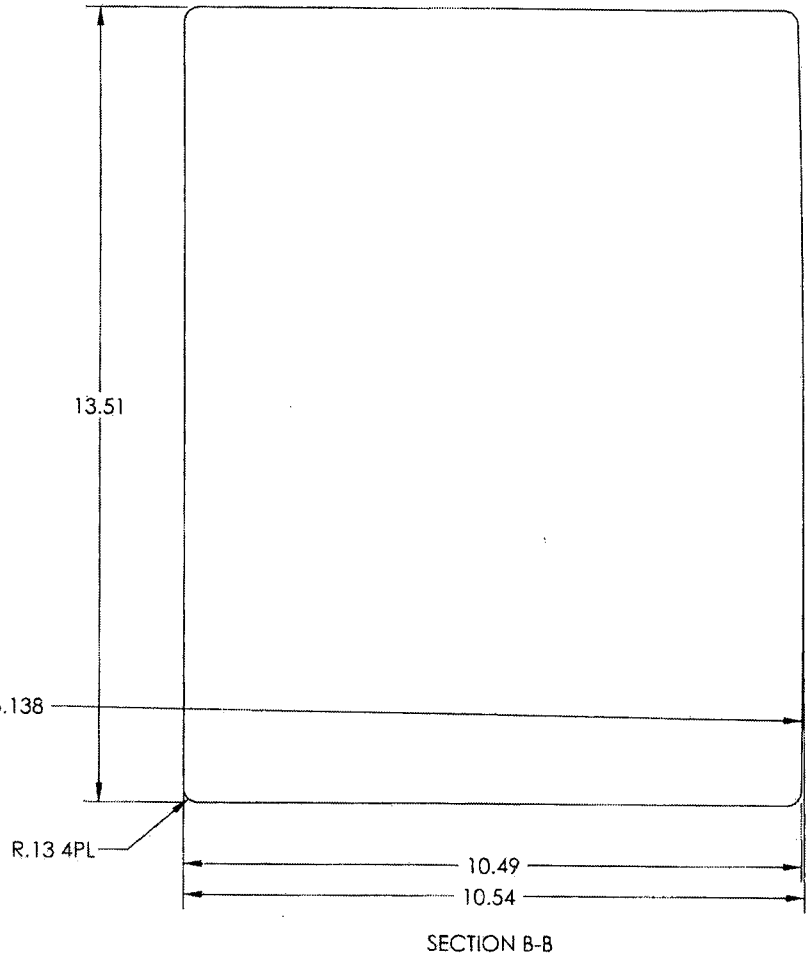

SECTION B-B

ORIGINAL DATE (MO-DA-YR)	08-18-08
DRAWN BY	CHECKED
P. BRAVO	S. JOSEPH
DRAWING APPROVAL	
S. JOSEPH	
08-18-08	
CONTRACT NO.	
UNLESS OTHERWISE SPECIFIED DIMENSIONS ARE IN INCHES TOLERANCES ARE: 2 PLACE DECIMALS ± 0.1 3 PLACE DECIMALS ± 0.05 ANGLES ± 5°	

APICAL INDUSTRIES
2608 TEMPLE HEIGHTS DR.
OCEANSIDE, CA. 92056-3512 (760)724-5300

SHEETMETAL

SIZE	CAGE CODE	DWG. NO.	REV.
B	07MZ6	646.3700	A

SCALE NONE SHEET 2 OF 9

THE INFORMATION CONTAINED IN THIS DRAWING IS THE SOLE PROPERTY OF APICAL INDUSTRIES ANY REPRODUCTION IN PART OR WHOLE WITHOUT THE WRITTEN PERMISSION OF APICAL INDUSTRIES IS PROHIBITED.

REVISIONS			
REV.	DESCRIPTION	DATE	APPROVED

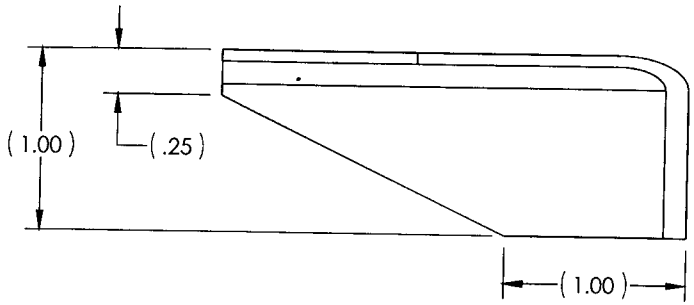

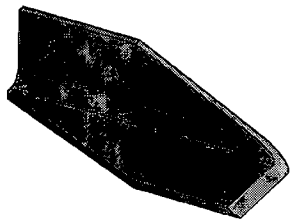

646.3711 SHOWN
646.3712 OPPOSITE

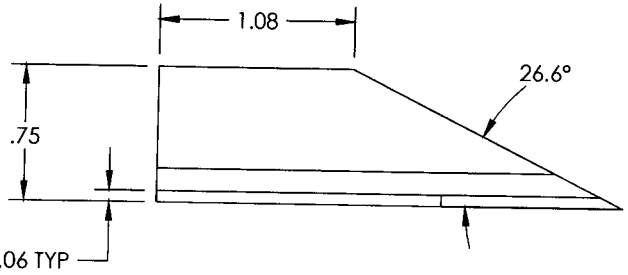

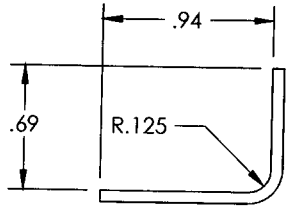

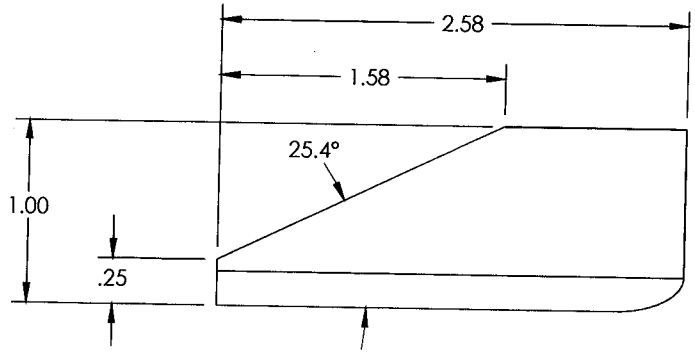

NEXT ASSY (S)	ORIGINAL DATE (DA-MO-YR) 08-18-08	APICAL INDUSTRIES	
	DRAWN BY P. BRAVO	CHECKER S. JOSEPH	2608 TEMPLE HEIGHTS DR. OCEANSIDE, CA. 92056-3512 (760)724-5300
	DRAWING APPROVAL S. JOSEPH 08-18-08		SHEETMETAL
	CONTRACT No.		
	UNLESS OTHERWISE SPECIFIED DIMENSIONS ARE IN INCHES TOLERANCES ARE: 2 PLACE DECIMALS ±.01 3 PLACE DECIMALS ±.005 ANGLES ± .5°	SIZE B / CAGE CODE 07MZ6 / DWG. NO. 646.3700 / REV. A	
		SCALE: NONE	SHEET 3 OF 9

THE INFORMATION CONTAINED IN THIS DRAWING IS THE SOLE PROPERTY OF APICAL INDUSTRIES. ANY REPRODUCTION IN PART OR WHOLE WITHOUT THE WRITTEN PERMISSION OF APICAL INDUSTRIES IS PROHIBITED.

REVISIONS			
REV	DESCRIPTION	DATE	APPROVED

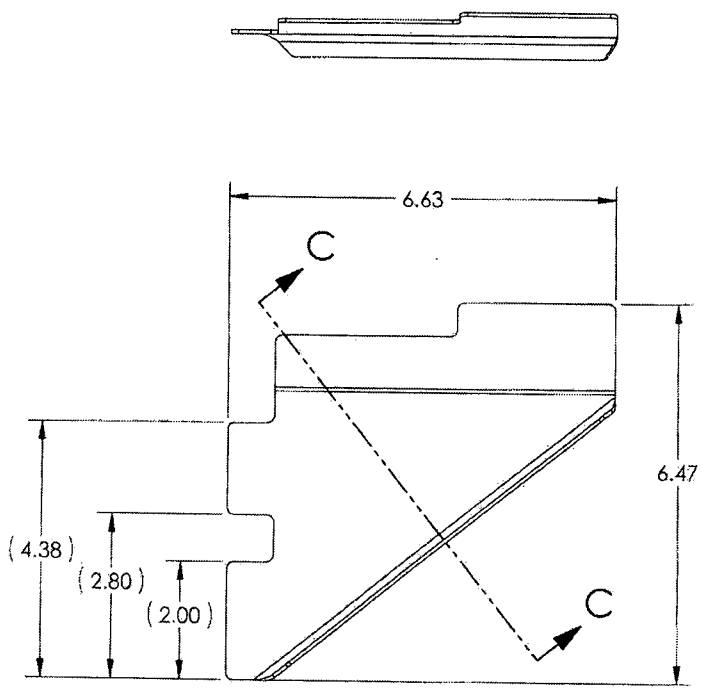

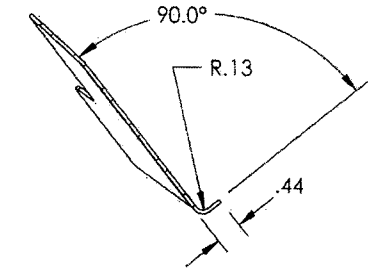

SECTION C-C

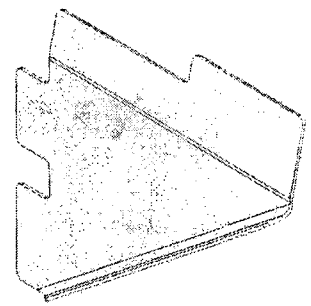

646.3713

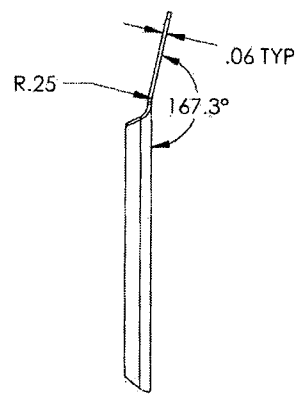

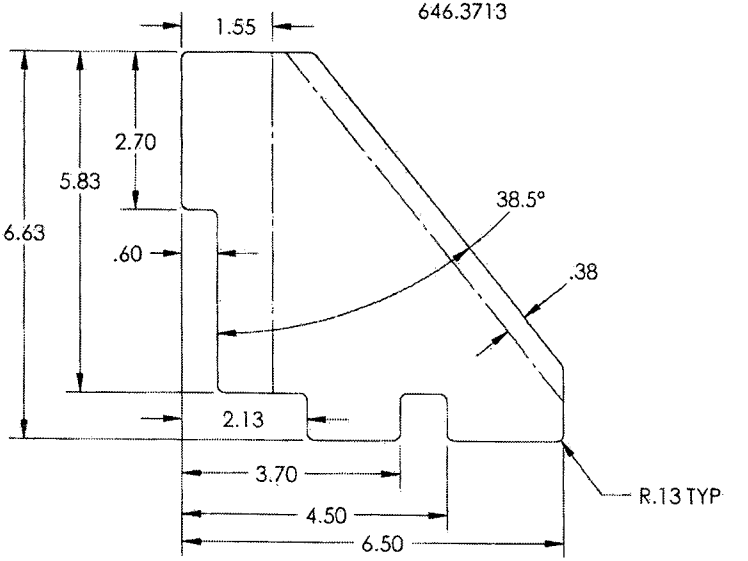

FLAT PATTERN

NEXT ASSY (S)	ORIGINAL DATE (DA-MO-YR) 08-18-08	APICAL INDUSTRIES 2608 TEMPLE HEIGHTS DR. OCEANSIDE, CA. 92056-3512 (760)724-5300
	DRAWN BY P. BRAVO / CHECKER S. JOSEPH	
	DRAWING APPROVAL S. JOSEPH 08-18-08	SHEETMETAL
	CONTRACT No	
	UNLESS OTHERWISE SPECIFIED DIMENSIONS ARE IN INCHES TOLERANCES ARE 2 PLACE DECIMALS ±.01 3 PLACE DECIMALS ±.005 ANGLES ± 5°	SIZE B / CAGE CODE 07M26 / DWG NO 646.3700 / REV A SCALE: NONE / SHEET 4 OF 9

THE INFORMATION CONTAINED IN THIS DRAWING IS THE SOLE PROPERTY OF APICAL INDUSTRIES. ANY REPRODUCTION IN PART OR WHOLE WITHOUT THE WRITTEN PERMISSION OF APICAL INDUSTRIES IS PROHIBITED

REVISIONS			
REV	DESCRIPTION	DATE	APPROVED

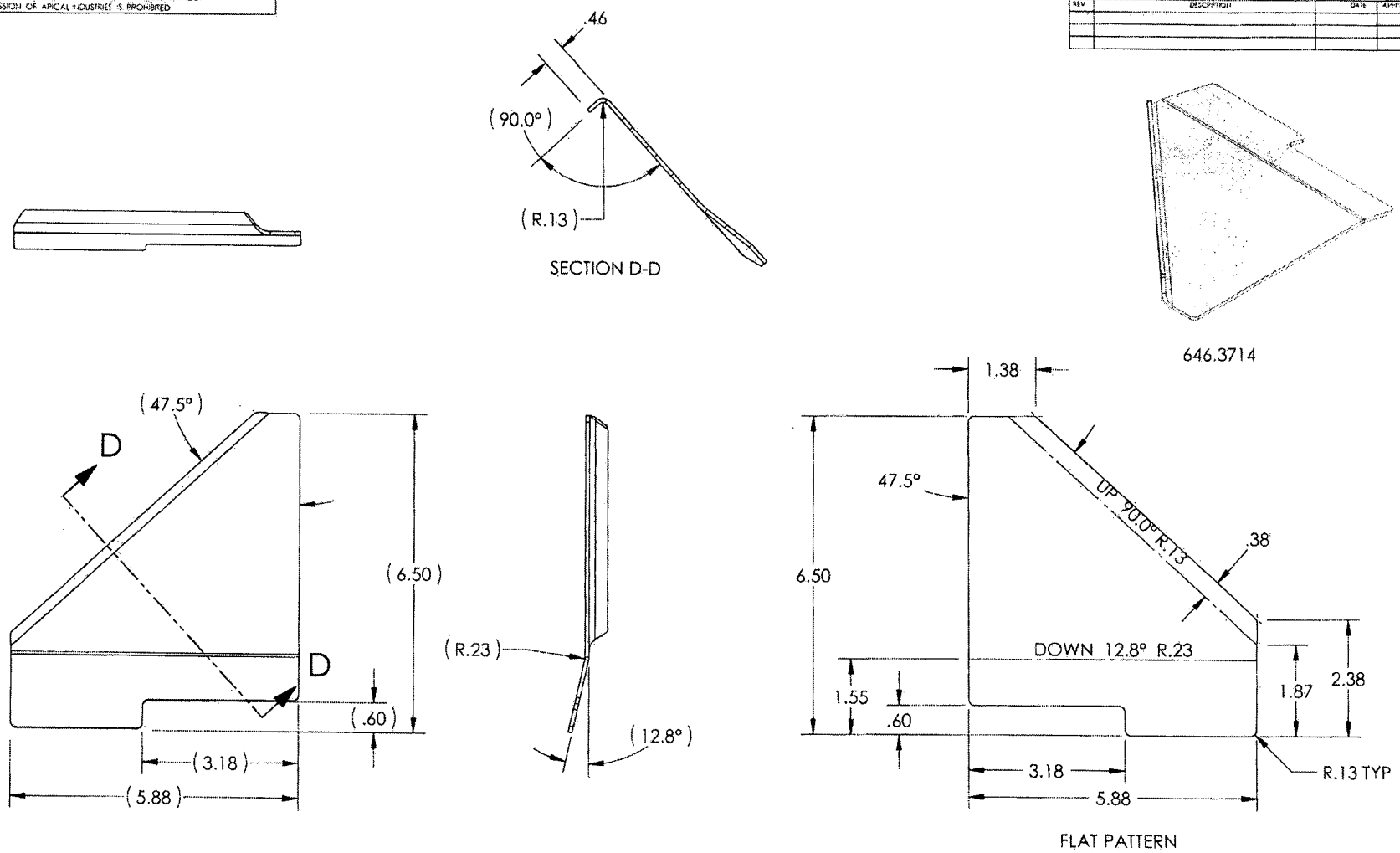

ORIGINAL DATE (MO-DA-YR) 06-18-08	APICAL INDUSTRIES 2608 TEMPLE HEIGHTS DR OCEANSIDE, CA. 92056-3512 (760)724-5300
DRAWN BY P. BRAVO / CHECKED S. JOSEPH	
DRAWING APPROVAL S. JOSEPH 06-18-08	SHEETMETAL
CONTRACT No	
UNLESS OTHERWISE SPECIFIED DIMENSIONS ARE IN INCHES TOLERANCES ARE: 2 PLACE DECIMALS ±.01 3 PLACE DECIMALS ±.005 ANGLES ± 2°	SIZE B / CAGE CODE 07MZ6 / DWG NO 646.3700 / REV A
	SCALE NONE / SHEET 5 OF 9

THE INFORMATION CONTAINED IN THIS DRAWING IS THE SOLE PROPERTY OF APICAL INDUSTRIES ANY REPRODUCTION IN PART OR WHOLE WITHOUT THE WRITTEN PERMISSION OF APICAL INDUSTRIES IS PROHIBITED.

REVISIONS			
REV.	DESCRIPTION	DATE	APPROVED

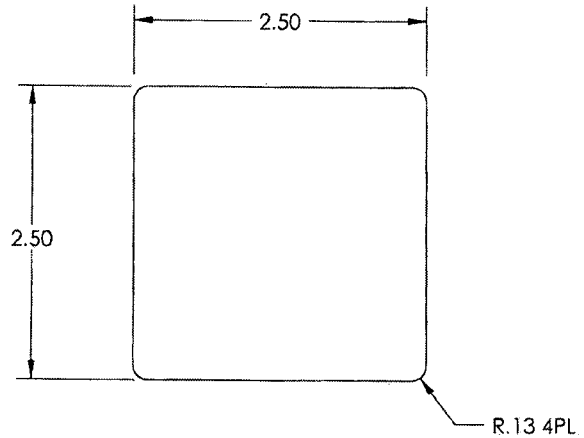

646.3715

NEXT ASSY (S)	ORIGINAL DATE (DA-MO-YR) 08-18-08 DRAWN BY P. BRAVO CHECKED S. JOSEPH DRAWING APPROVAL S. JOSEPH 08-18-08 CONTRACT NO. UNLESS OTHERWISE SPECIFIED DIMENSIONS ARE IN INCHES TOLERANCES ARE 2 PLACE DECIMALS ± .01 3 PLACE DECIMALS ± .005 ANGLES ± 3°	APICAL INDUSTRIES 2608 TEMPLE HEIGHTS DR. OCEANSIDE, CA. 92056-3512 (760)724-5300 SHEETMETAL SIZE B | CAGE CODE 07MA6 | DWG. NO 646.3700 | REV A SCALE: NONE SHEET 6 OF 9

THE INFORMATION CONTAINED IN THIS DRAWING IS THE SOLE PROPERTY OF APICAL INDUSTRIES. ANY REPRODUCTION IN PART OR WHOLE WITHOUT THE WRITTEN PERMISSION OF APICAL INDUSTRIES IS PROHIBITED.

REVISIONS			
REV	DESCRIPTION	DATE	APPROVED

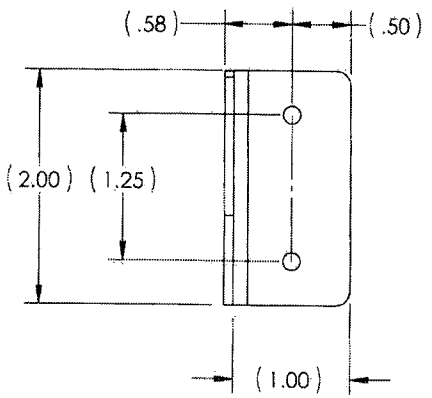

646.3716

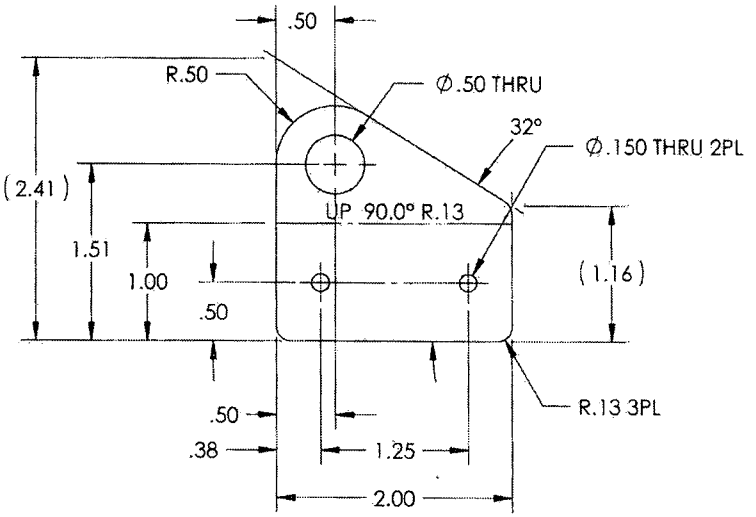

FLAT PATTERN

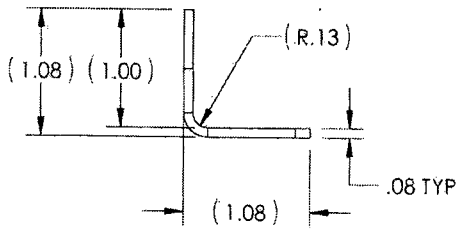

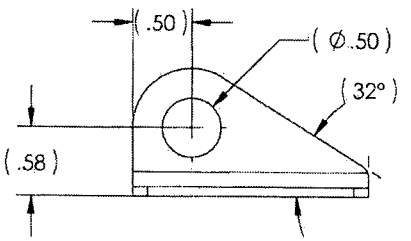

NEXT ASSY (S)	ORIGINAL DATE (DA-MO-YR) 08-18-08 DRAWN BY P. BRAVO CHECKER S. JOSEPH DRAWING APPROVAL S. JOSEPH 08-18-08 CONTRACT No	APICAL INDUSTRIES 2608 TEMPLE HEIGHTS DR. OCEANSIDE, CA. 92056-3512 (760)724-5300 SHEETMETAL
	UNLESS OTHERWISE SPECIFIED DIMENSIONS ARE IN INCHES TOLERANCES ARE 2 PLACE DECIMALS ±.01 3 PLACE DECIMALS ±.005 ANGLES ± 5°	SIZE B · CAGE CODE 07MZ6 · DWG NO 646.3700 · REV A SCALE NONE · SHEET 7 OF 9

THE INFORMATION CONTAINED IN THIS DRAWING IS THE SOLE PROPERTY OF APICAL INDUSTRIES. ANY REPRODUCTION IN PART OR WHOLE WITHOUT THE WRITTEN PERMISSION OF APICAL INDUSTRIES IS PROHIBITED.

REVISIONS			
REV.	DESCRIPTION	DATE	APPROVED

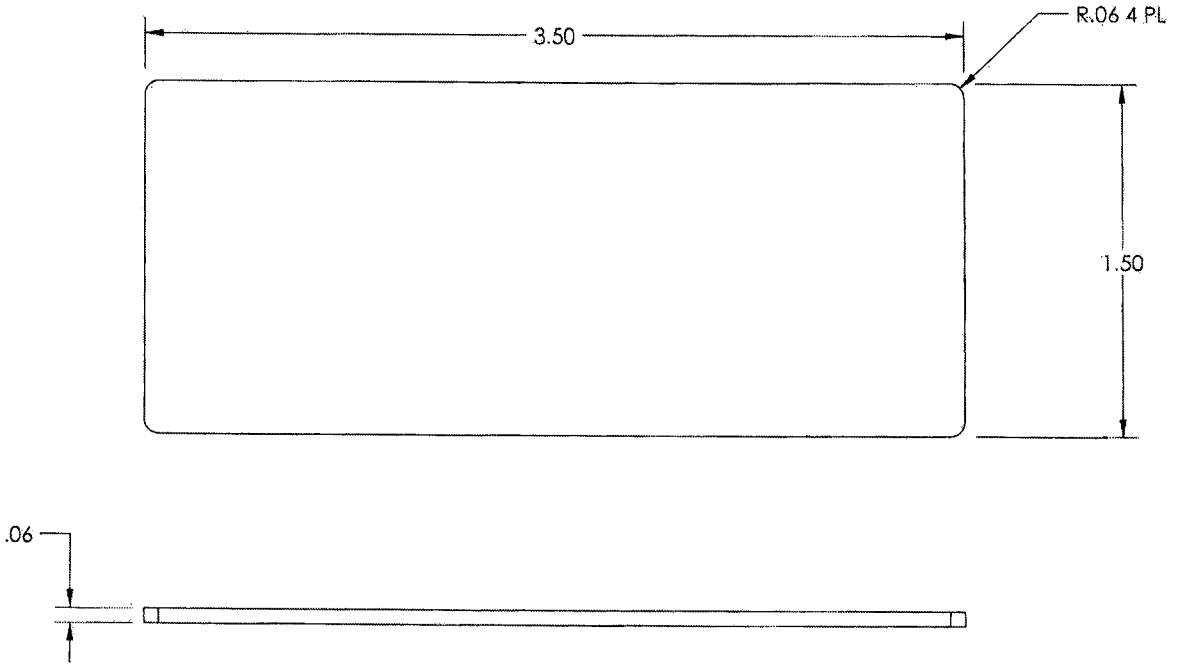

646.3717

NEXT ASSY (S)	ORIGINAL DATE (DA-MO-YR) 08-18-08
	DRAWN BY: P. BRAVO; CHECKED: S. JOSEPH
	DRAWING APPROVAL: S. JOSEPH 08-18-08
	CONTRACT No:
	UNLESS OTHERWISE SPECIFIED DIMENSIONS ARE IN INCHES. TOLERANCES ARE: 2 PLACE DECIMALS ±.01; 3 PLACE DECIMALS ±.005; ANGLES ± .5°

APICAL INDUSTRIES
2608 TEMPLE HEIGHTS DR.
OCEANSIDE, CA. 92056-3512 (760)724-5300

SHEETMETAL

SIZE	CAGE CODE	DWG. NO	REV
B	07MZ6	646.3700	A

SCALE: NONE | SHEET 8 OF 9

THE INFORMATION CONTAINED IN THIS DRAWING IS THE SOLE PROPERTY OF APICAL INDUSTRIES. ANY REPRODUCTION IN PART OR WHOLE WITHOUT THE WRITTEN PERMISSION OF APICAL INDUSTRIES IS PROHIBITED.

REVISIONS			
REV.	DESCRIPTION	DATE	APPROVED

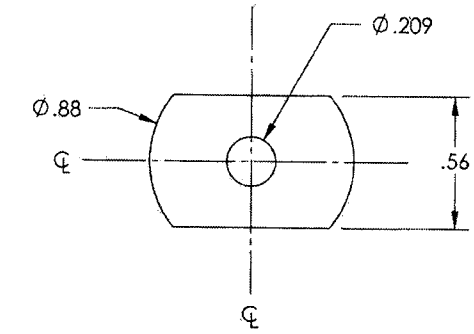

646.3718

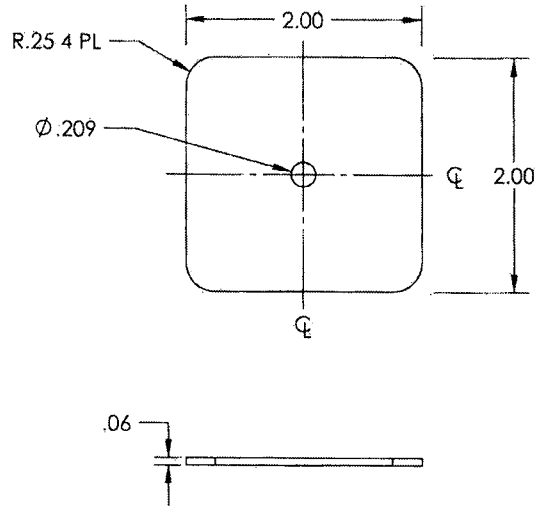

646.3719

NEXT ASSY (S)	ORIGINAL DATE (DD-MO-YR) 08-16-08	APICAL INDUSTRIES
	DRAWN BY P. BRAVO / CHECKED S. JOSEPH	2608 TEMPLE HEIGHTS DR. OCEANSIDE, CA. 92056-3512 (760)724-5300
	DRAWING APPROVAL S. JOSEPH 08-16-08	SHEETMETAL
	CONTRACT No.	
	UNLESS OTHERWISE SPECIFIED DIMENSIONS ARE IN INCHES TOLERANCES ARE: 2 PLACE DECIMALS ±.03 3 PLACE DECIMALS ±.015 ANGLES ± 5°	SIZE B / CAGE CODE 07MZ6 / DWG. NO. 646.3700 / REV. A
		SCALE: NONE / SHEET 9 OF 9

DART AEROSPACE LTD	Work Order:	140845
Description: Gauge Bracket	Part Number:	646.3716
Inspection Dwg: 646.3700 **Rev:** A		Page 1 of 1

FIRST ARTICLE INSPECTION CHECKLIST

Drawing Dimension	Tolerance	Actual Dimension	Accept	Reject	Method of Inspection	Comments
Ø0.50	+0.006/-0.001	0.501	✓		U-DC02	
Ø0.150	+0.005/-0.001	0.153	✓			
0.50	+/-0.005	0.501	✓			
1.16	+/-0.005	1.16	✓			
2.00	+/-0.005	1.997	✓			
1.25	+/-0.005	1.249	✓			
0.38	+/-0.005	0.378	✓			
0.50	+/-0.005	0.501	✓			
1.51	+/-0.005	1.509	✓			
0.080	+/-0.005	0.079	✓			

Measured by:		Audited by:	DAS 38 9-89	Preliminary Approval:	
Date:	16-1-22	Date:	JAN 22 2016	Date:	

Rev	Date	Change	Revised by	Approved
A	12.11.26	New Issue	KJ	

Dart Aerospace Ltd.
1270 Aberdeen Street
Hawkesbury, ON K6A 1K7
Tel: 613 632 9577
Fax: 613 632 1053

PURCHASE ORDER

Purchase Order ID PO31098

Purchase Order Date 1/21/2016
PO Print Date 1/28/2016

Order From : VC-ATG001

A.T.G. INDUSTRIES INC.
731 INDUSTRIELLE ROAD
ROCKLAND, ON K4K 1T2
CANADA

Ship To : DART AEROSPACE LTD
1270 ABERDEEN
HAWKESBURY, ON K6A 1K7
CANADA

Contact Name		**Buyer**	Chantal Lavoie
Vendor Phone	613-446-4544	**Customer POID**	
		Customer Tax #	10127-2607
Ship To Contact		**Terms**	Net 30
Ship To Phone		**Currency**	CAD
Ship Via:	VENDOR'S TRUCK	**FOB**	FCA – (Free Carrier)
Ship Acct:			

19	140084	646.3713 GUSSET REV. A	2/5/2016 Yes 2/5/2016	26.00		$16.13	$419.32

FINISH: HARD BLACK ANODIZE AS PER IAW MIL-A-8625 TYPE III, CLASS 2 / PRIME AS PER IAW MIL-P-23377J TYPE 1 CLASS N

Line Total: **$419.32**

20	140845	646.3716 GUAGE BRACKET REV. A	2/5/2016 Yes 2/5/2016	44.00		$6.48	$285.02

FINISH: HARD BLACK ANODIZE AS PER IAW MIL-A-8625 TYPE III, CLASS 2 / PRIME AS PER IAW MIL-P-23377J TYPE 1 CLASS N

Line Total: **$285.02**

21	140895	646.3811 RADIUS BLOCK REV. N/C	2/5/2016 Yes 2/5/2016	20.00		$6.93	$138.56

FINISH: HARD BLACK ANODIZE AS PER IAW MIL-A-8625 TYPE III, CLASS 2 / PRIME AS PER IAW MIL-P-23377J TYPE 1 CLASS N

Line Total: **$138.56**

PO Instructions: ADMIN FEE ARE INCLUDED IN PRICING PER UNIT

Note:

A.T.G. INDUSTRIES INC.
731 INDUSTRIELLE STREET
ROCKLAND, ON K4K 1T2
Canada

Ph: (613) 446-4544 Fax: (613) 446-4556

Pack List

Number: 911174 Date: 03-Feb-16

To

Dart Aerospace Ltd
1270 Aberdeen St
Hawkesbury, ON K6A 1K7

Ship To

CHANTAL LAVOIE

Terms	Ship Via

Quantity	Description		
	PLEASE REFERENCE THE PACK LIST NUMBER ON ALL CORRESPONDENCE TO THIS SHIPMENT. IF YOU HAVE ANY QUESTIONS, PLEASE CALL AT (613) 446-4544.		
10 ea	Part: 140433 646.3010 LH HALF Job: 19097	PO: 31098	Rev: N/C Line: 1
12 ea	Part: 140567 646.3011 RH HALF Job: 19107	PO: 31098	Rev: N/C Line: 13
30 ea	Part: 140058 646.3812 GUSSET BRACKET Job: 19108	PO: 31098	Rev: N/C Line: 14
12 ea	Part: 140119 646.3813 STRUT BRACKET Job: 19110	PO: 31098	Rev: N/C Line: 16
16 ea	Part: 140240 646.3610 LH HALF Job: 19098	PO: 31098	Rev: N/C Line: 2
44 ea	Part: 140845 646.3716 GUAGE BRACKET Job: 19113	PO: 31098	Rev: A Line: 20
20 ea	Part: 140895 646.3811 RADIUS BLOCK Job: 19114	PO: 31098	Rev: N/A Line: 21
36 ea	Part: 140788 646.3718 CUSTOM WASHER Job: 19101	PO: 31098	Rev: A Line: 5

Sp16-02-03

A.T.G. INDUSTRIES INC.
731 INDUSTRIELLE STREET
ROCKLAND, ON K4K 1T2
Canada

Ph: (613) 446-4544 Fax: (613) 446-4556

Pack List

Number: 911174 Date: 03-Feb-16

To

Dart Aerospace Ltd
1270 Aberdeen St
Hawkesbury, ON K6A 1K7

Ship To

CHANTAL LAVOIE

Terms	Ship Via

Quantity	Description		
20 ea	Part: 136147 646.3012 LOWER GUIDE Job: 19103	Rev: N/C PO: 31098	Line: 8
30 ea	Part: 140151 646.3810 BRACKET Job: 19104	Rev: N/C PO: 31098	Line: 9

DATE : 3/2/16

CERTIFIED SIGNATURE : _____

RECEIVER SIGNATURE : _____

Note: This Packing Slip may contain parts that have been PLATED. Items that are plated may be subject to natural tarnishing and it is suggested that they be inspected within 24 hours of receipt.

CERTIFICATE OF CONFORMANCE

A.T.G. INDUSTRIES INC. CERTIFIES THAT ALL ITEMS IN THIS SHIPMENT CONFORM TO REQUIREMENTS.

MADE IN CANADA.